XY-TABLE ROTARY | 104

3-AXIS MOVEMENT

104 - XY Table Rotary

A rotary XY table is a mechanical device that provides rotational movement around a central axis (rotary) and linear movement in two perpendicular directions in the horizontal plane (XY).

Key Features:

- Precision Movement: Equipped with precision linear cross roller bearings for accurate movement across X and Y axes.
  - Movement Range: ±25 mm
  - Precision: ±0.01 mm
  - 360° rotation of top plate with lock fine adjustment up to ±5°

Clamping Mechanism:

Includes:

- Side Keeper Plate
- T Nut
- Flower Knob
- Suitable Tenon
- Ensures reliable clamping and fixation of workpieces or tools.

Material / Finish

  - Base - Aluminium Hard Anodizing
  - Top - SS 304 Surface Grinding

Highlight:

- Engineered for high-performance, multi-axis positioning
- Single-piece carriage for:
  - High precision
  - Extreme stiffness
  - Accurate alignment

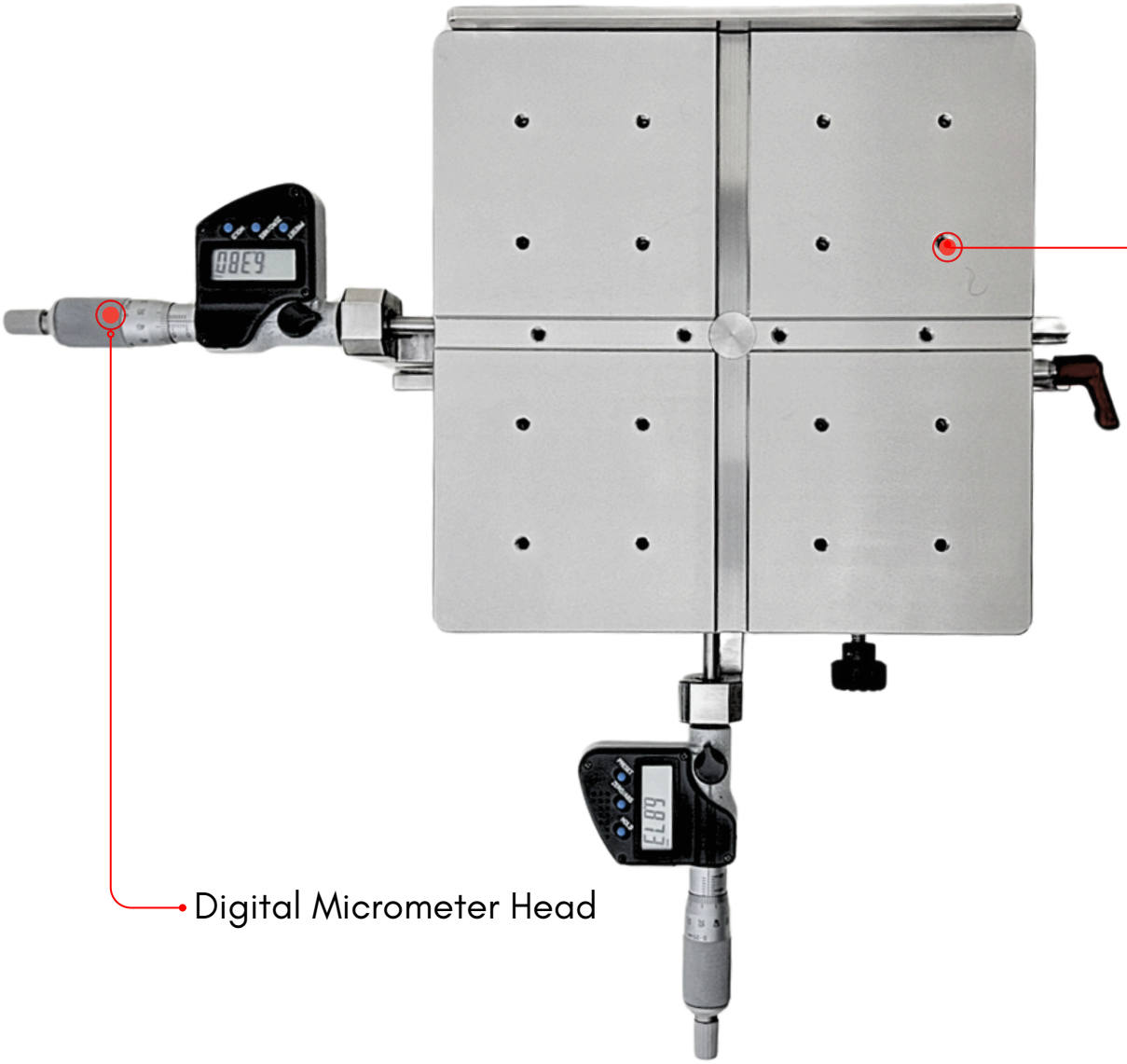
Fixture plate
Digital Micrometer Head

104 : XY Table with micrometer

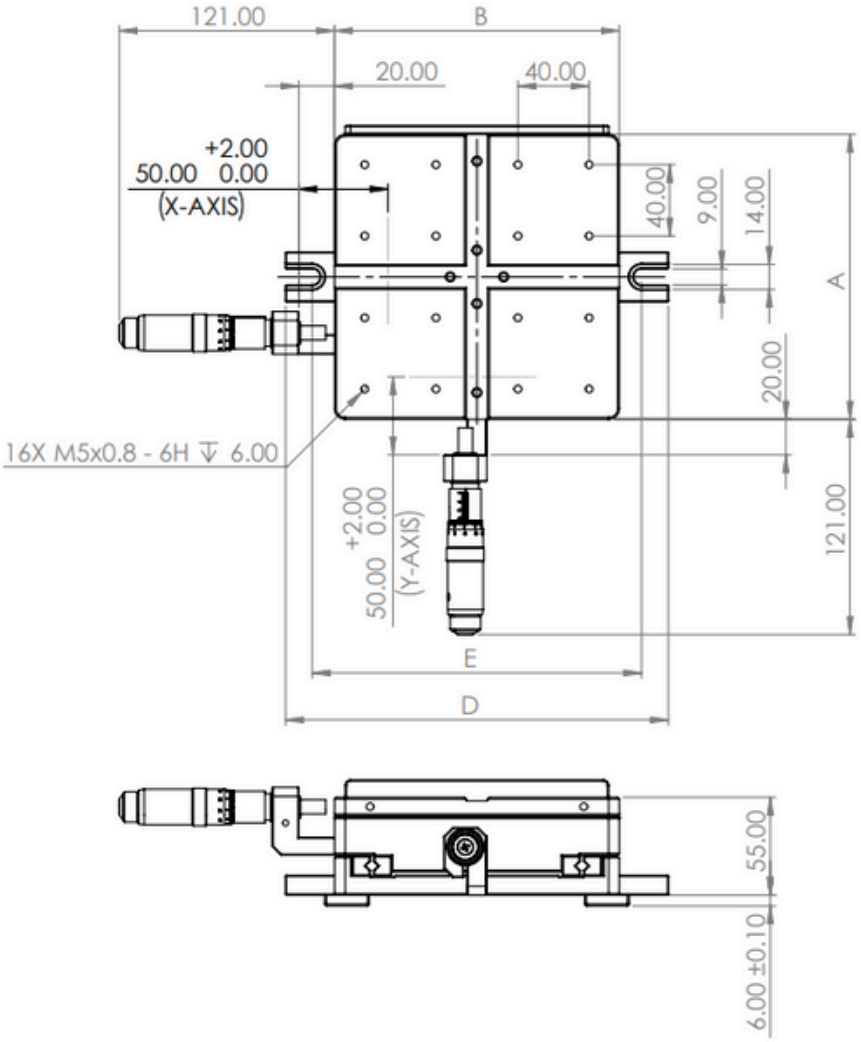

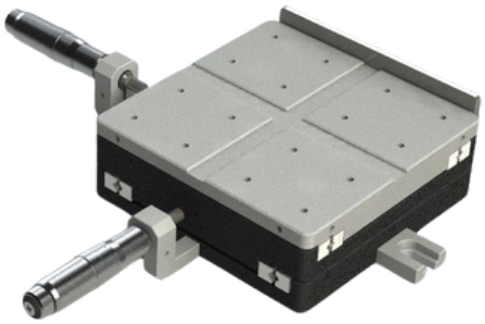

XY Table with micrometer

PART NUMBER	A	B	D	E	X	Y	R
1041001	160mm	160mm	215mm	185mm	25	25	-
1041002	200mm	200mm	255mm	225mm	25	25	-
1041003	250mm	250mm	305mm	275mm	25	25	-

104 : XY Table with Digital micrometer

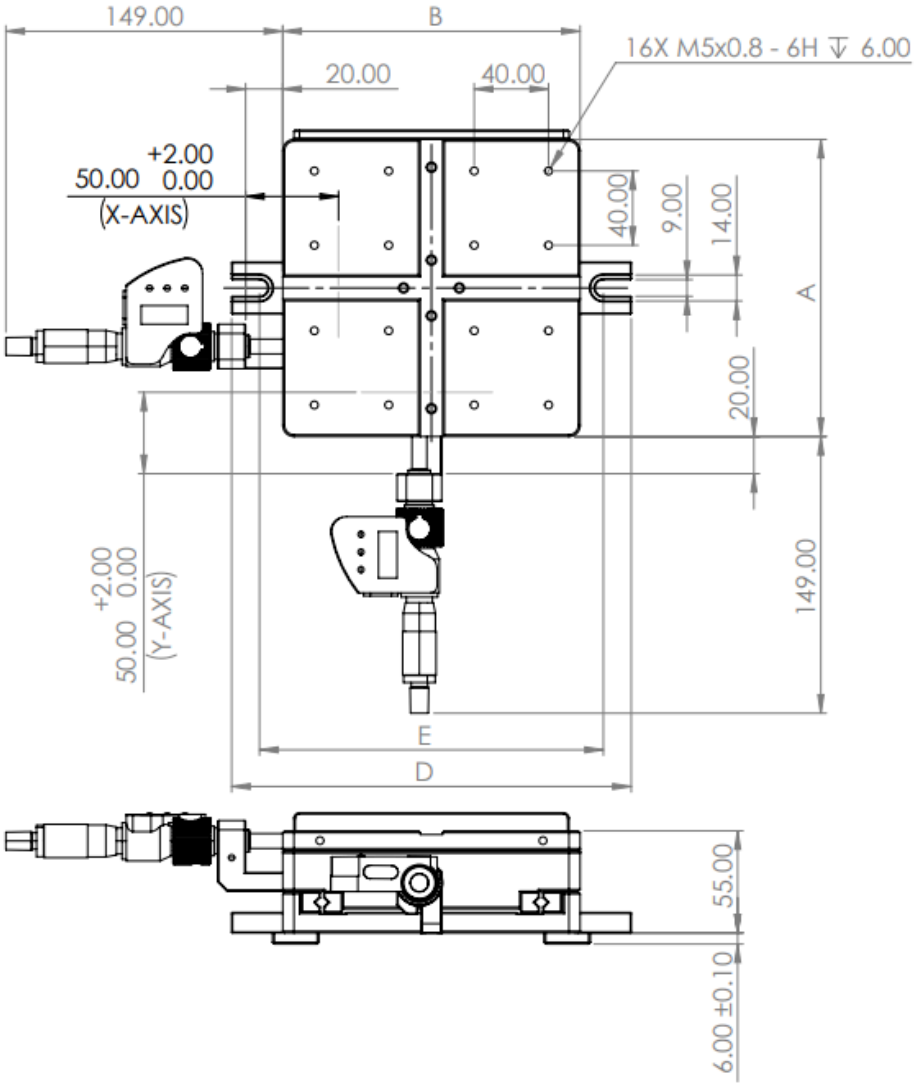

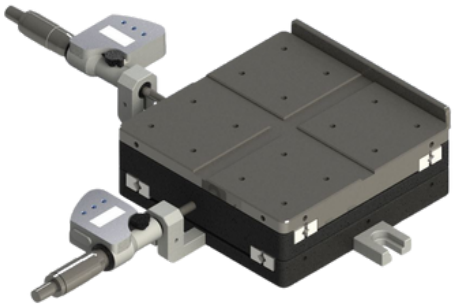

XY Table with Digital micrometer

PART NUMBER	A	B	D	E	X	Y	R
1041004	160mm	160mm	215mm	185mm	25	25	-
1041005	200mm	200mm	255mm	225mm	25	25	-
1041006	250mm	250mm	305mm	275mm	25	25	-

104 : XY Table with Knob

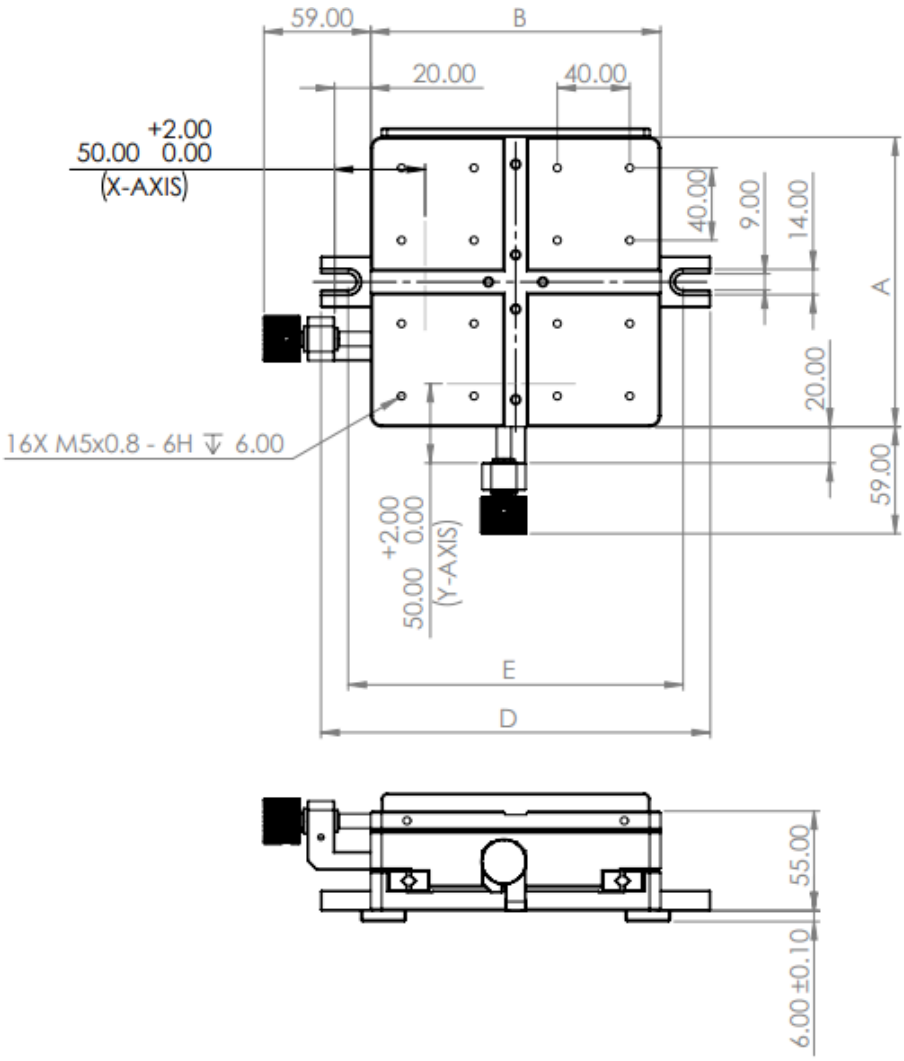

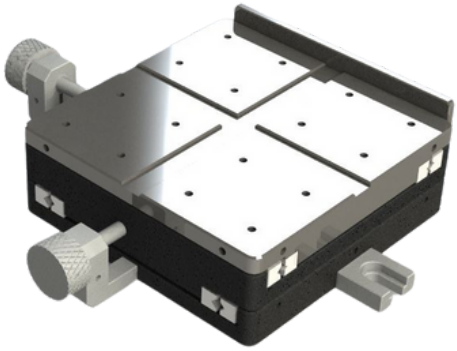

XY Table with Knob

PART NUMBER	A	B	D	E	X	Y	R
1041007	160mm	160mm	215mm	185mm	25	25	-
1041008	200mm	200mm	255mm	225mm	25	25	-
1041009	250mm	250mm	305mm	275mm	25	25	-
1041019	300mm	300mm	355mm	325mm	25	25	-

104 : XY Table Rotary with Micrometer

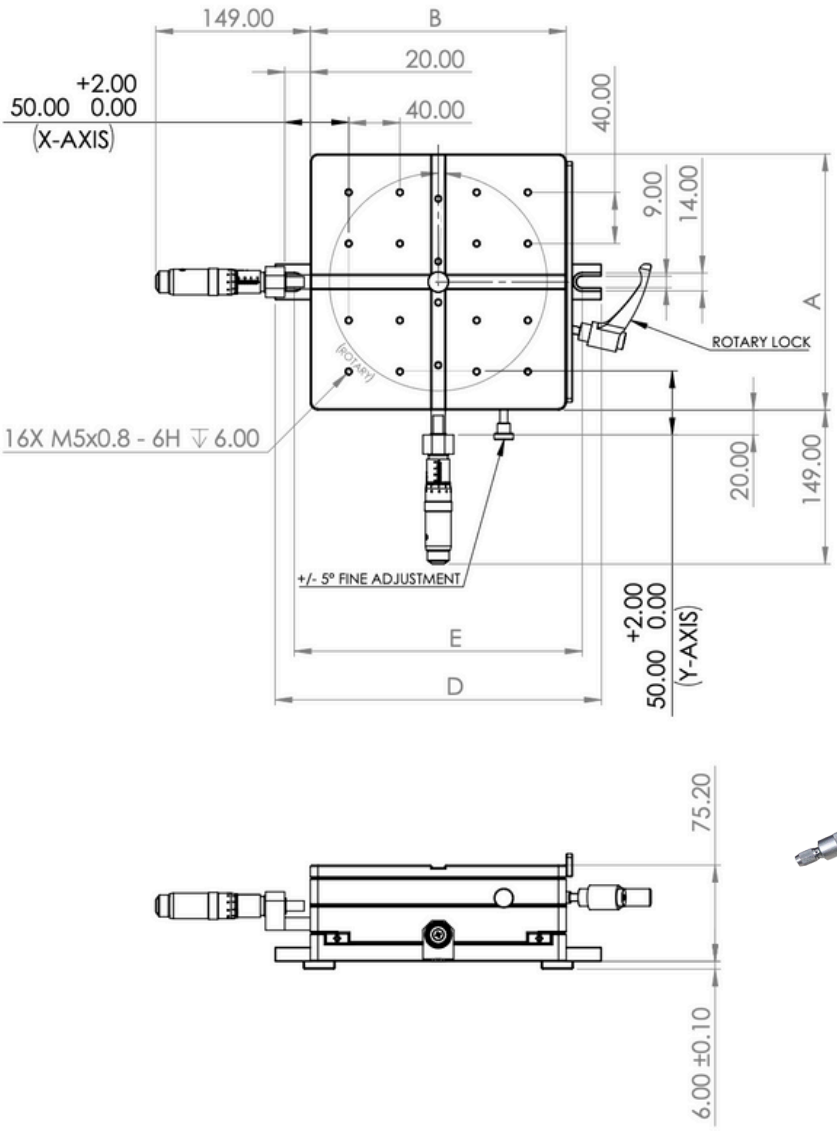

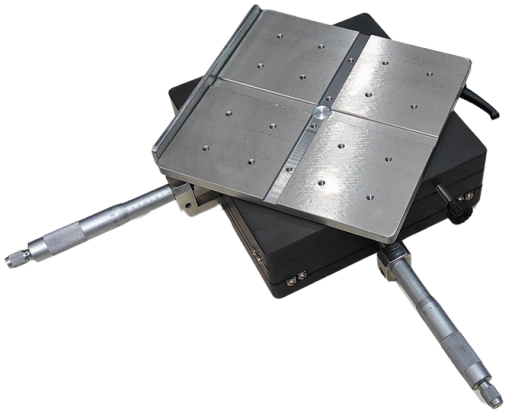

XY Table Rotary with Micrometer

PART NUMBER	A	B	D	E	X	Y	R
1041010	160mm	160mm	215mm	185mm	25	25	360°
1041011	200mm	200mm	255mm	225mm	25	25	360°
10410012	250mm	250mm	305mm	275mm	25	25	360°

104 : XY Table Rotary with Digital Micrometer

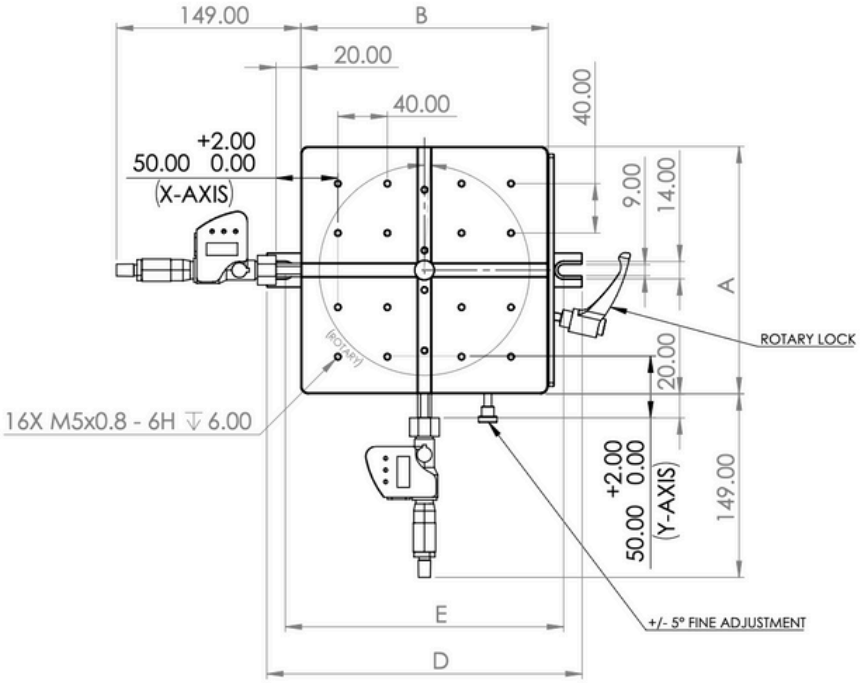

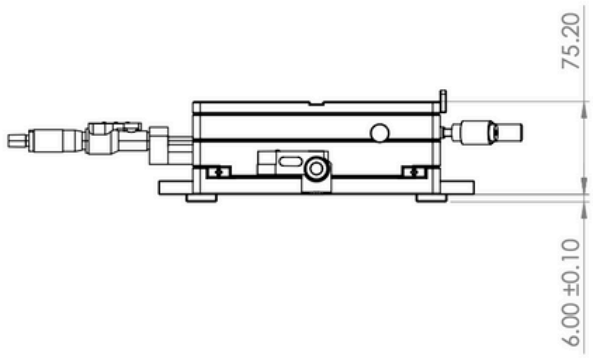

XY Table Rotary with Digital Micrometer

PART NUMBER	A	B	D	E	X	Y	R
1041013	160mm	160mm	215mm	185mm	25	25	360°
1041014	200mm	200mm	255mm	225mm	25	25	360°
1041015	250mm	250mm	305mm	275mm	25	25	360°

104 : XY Table Rotary with Knob

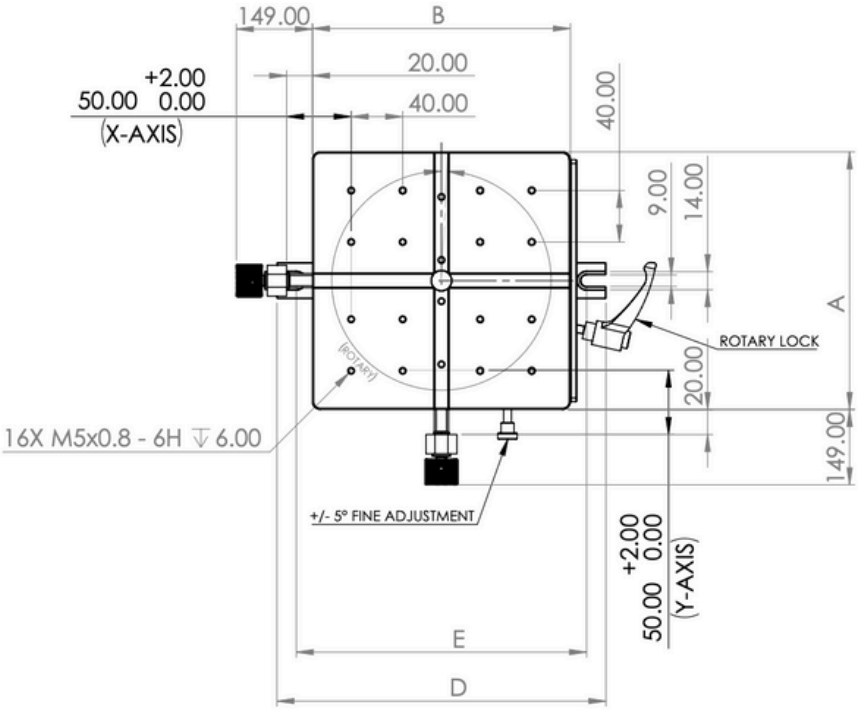

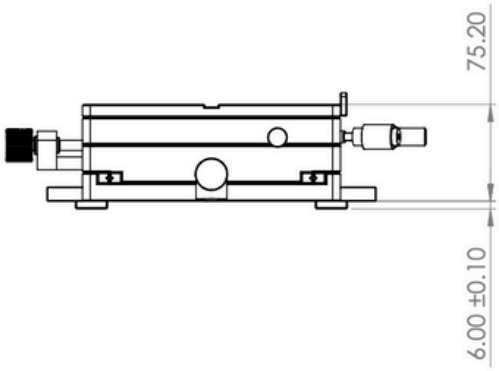

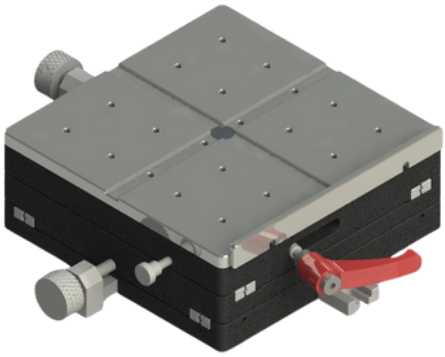

XY Table Rotary with Knob

PART NUMBER	A	B	D	E	X	Y	R
1041016	160mm	160mm	215mm	185mm	25	25	360°
1041017	200mm	200mm	255mm	225mm	25	25	360°
1041018	250mm	250mm	305mm	275mm	25	25	360°
1041020	300mm	300mm	355mm	325mm	25	25	360°

104 - XY TABLE

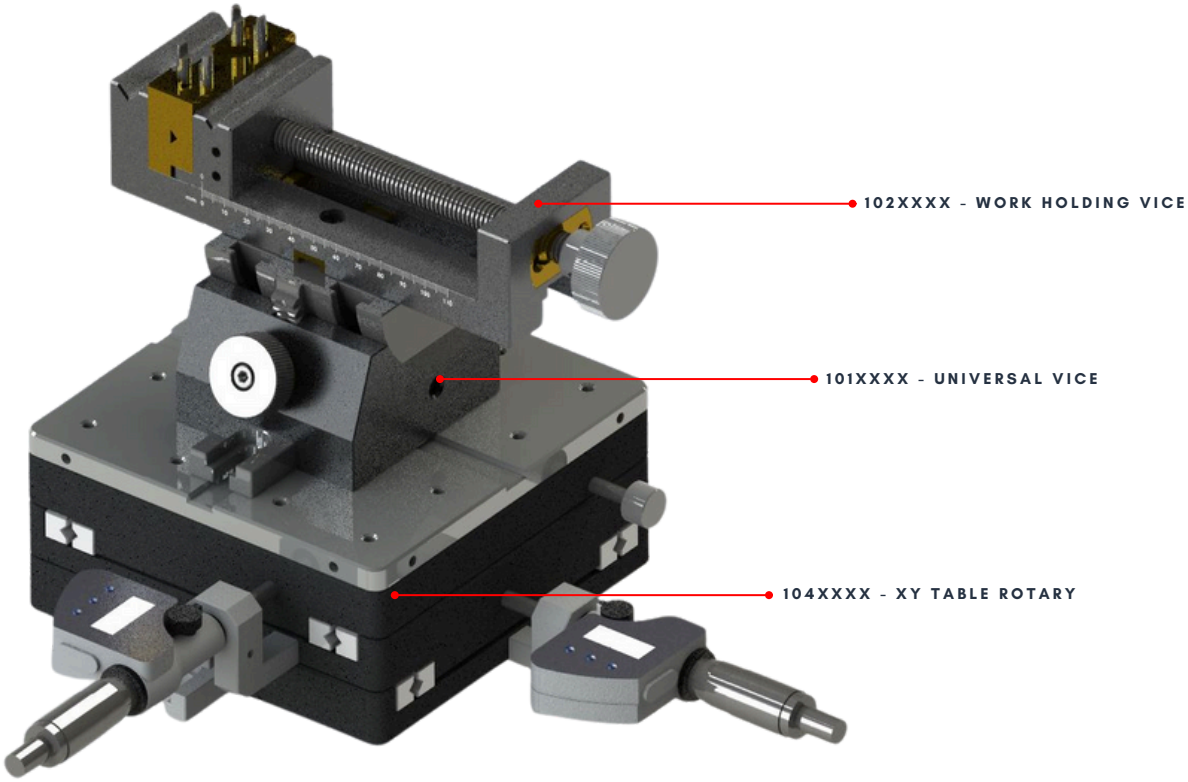

THE ITEM WILL BE ATTACHED TO ALL THE PRODUCTS LISTED BELOW.

WORK HOLDING VICE

PART NUMBER	DISCRIPTION
1021010	Vice 50mm
1021011	Vice 100mm
1021012	Vice 150mm

Y TABLE ROTARY

PART NUMBER	DISCRIPTION
1031001	Y Table 160mm with micrometer
1031002	Y Table 200mm with micrometer
1031003	Y Table 250mm with micrometer
1031004	Y Table 160mm with Digital micrometer
1031005	Y Table 200mm with Digital micrometer
1031006	Y Table 250mm with Digital micrometer
1031007	Y Table 160mm with knob
1031008	Y Table 200mm with knob
1031009	Y Table 250mm with knob

CHUCK

PART NUMBER	DISCRIPTION
1091001	3 JAW CHUCK
1091002	3 JAW CHUCK

XY TABLE ROTARY

PART NUMBER	DISCRIPTION
1041001	XY Table 160mm with micrometer
1041002	XY Table 200mm with micrometer
1041003	XY Table 250mm with micrometer
1041004	XY Table 160mm with Digital micrometer
1041005	XY Table 200mm with Digital micrometer
1041006	XY Table 250mm with Digital micrometer
1041007	XY Table 160mm with knob
1041008	XY Table 200mm with knob
1041009	XY Table 250mm with knob
1041010	XY Table Rotary 160mm with micrometer
1041011	XY Table Rotary 200mm with micrometer
1041012	XY Table Rotary 250mm with micrometer
1041013	XY Table Rotary 160mm with Digital micrometer
1041014	XY Table Rotary 200mm with Digital micrometer
1041015	XY Table Rotary 250mm with Digital micrometer
1041016	XY Table Rotary 160mm with knob
1041017	XY Table Rotary 200mm with knob
1041018	XY Table Rotary 250mm with knob
1041019	XY Table 300mm with knob
1041020	XY Table Rotary 300mm with knob

EMACHINESHOP

3/2, Swarnambigai street, Ekkatuthangal,
Chennai, Tamil Nadu 600032

sales@emachineshop.in

www.emachineshop.in

Where Precision Meets Innovation